ARIZONA CORRECTIONAL INDUSTRIES

Outdoor Furnishings

Innovative Solutions ↔ Productive Lives®

MP4800 Standard Ramada (Shade Structure)

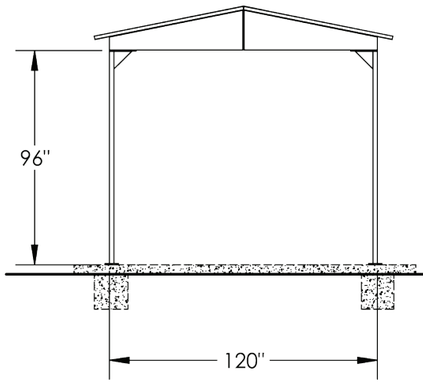

End Elevation

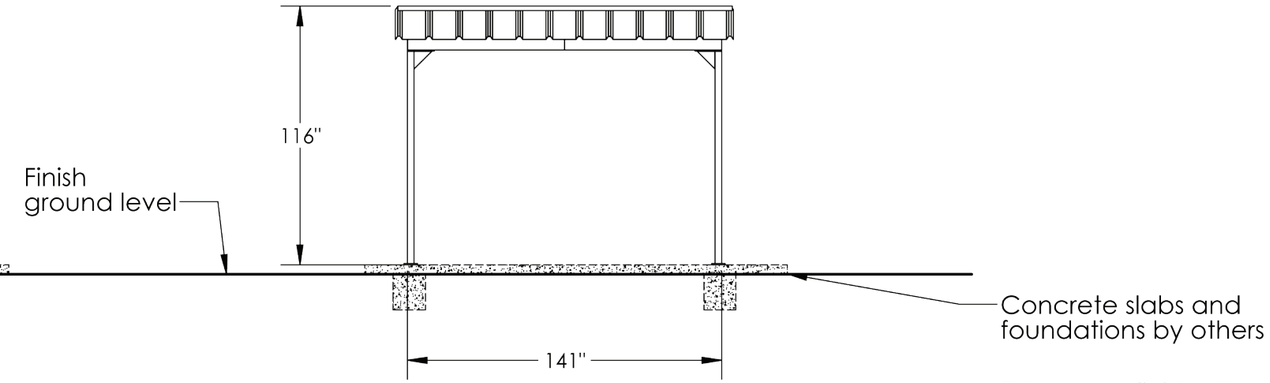

Front Elevation

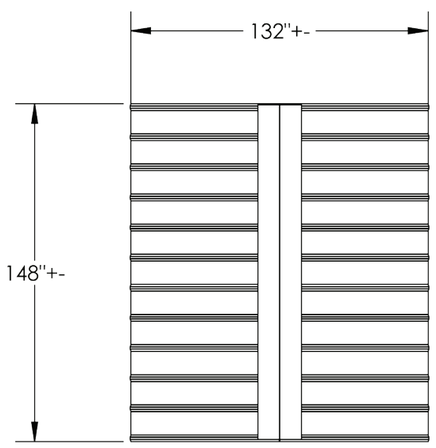

Roof Plan

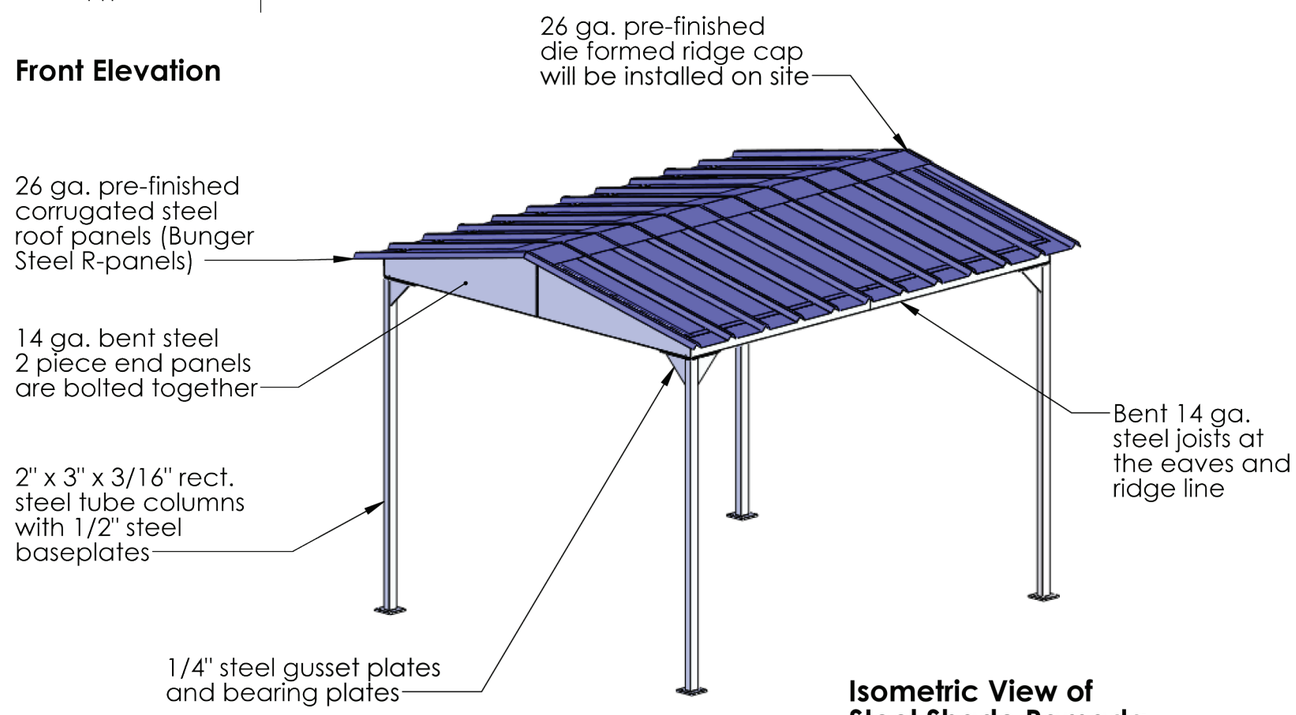

Isometric View of Steel Shade Ramada